MAKOINSTAL
Infrastruktura sanitarna

Product code:
PSP 760P

Tilted floor handrailwith place for a paper PSP 760P

- Two finishing options available: glossy (PSP 760) or mat (PSM 760)
- Smooth edges to prevent accidental catching and cuts
- Can be freely lifted upwards
- Maximum lifting capacity of 120 kg
- Made of AISI 304 stainless steel, resistant to corrosion, rust and some acids
- Can be installed in rooms exposed to moisture
- Mounting kit included
- Stainless steel cap nuts
- Easy to clean
- Certificate of the Polish Institute of Hygiene
- CE declaration of conformity
- National Declaration of Performance

Material	AISI 304 stainless steel
finish	Gloss (PSP 760P) or Mat (PSM 760)
Handrail type	Tilting, arched, floor with space for a spare roll of paper
Handrail length	600 mm
Tube diameter	Ø 32 mm
The wall thickness :	1,5 mm
Maximum capacity	120 kg
Hole diameter	Ø 12 mm
Number of fixing holes:	6
Includes	8x100 mm screws, 12x100 mm plugs

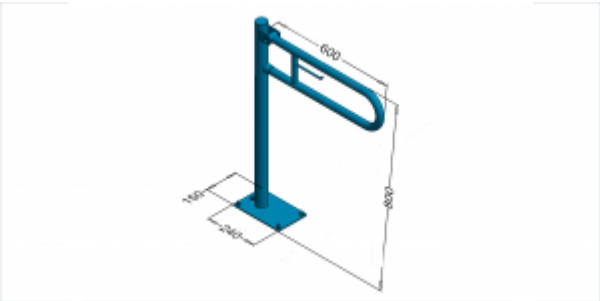

The handrail 760P is made of AISI 304 stainless steel. The tube used for production has a diameter of 32 mm and a wall thickness of 1.5 mm. The total length of the curved railing is 600 mm, while the height of the supporting tube used is 800 mm. The steel handrail with a diameter of 32 mm, type 760, is available in two finishes:

- glossy (PSP 760P)
- in the mat (PSM 760P)

Moreover, the presented handrail is a tilting handrail, which means that it can be freely tilted upwards. Its main task is to assist with propping up and rising. It can also be used as a mobility aid, for a toilet or a shower.

It is also important to know that each handrail comes with a mounting kit (including, among others, screws, washers, wall plugs, plugs), as well as a user manual and a warranty card. The offered handrails are certified by the Polish Institute of Hygiene, CE Declaration of Conformity and the National Declaration of Performance.

Makoinstal S.C.
ul. Ostrobramska 67, 04-175 Warszawat
+48 22 499 59 50, +48 22 499 59 51
makoinstal@makoinstal.pl