MAKOINSTAL
Infrastruktura sanitarna

Product code:
32-UR6-9005

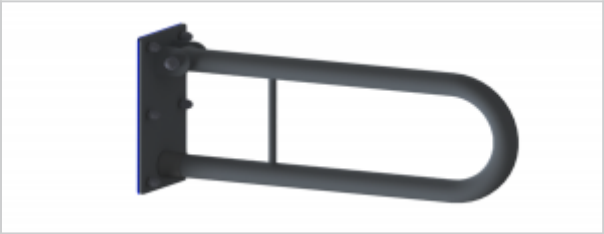

Arched tilting handrail 60cm 32-UR6-9005

- Smooth edges to prevent accidental catching and injury
- Maximum lifting capacity of 130 kg
- Made of carbon steel
- Mounting kit included
- Silicone pads to eliminate unevenness
- Black finish
- Easy to clean
- Certificate of the Polish Institute of Hygiene
- CE declaration of conformity
- National Declaration of Performance

Material	Carbon steel
Finish	Powder coated in black
Type of coating	Polyester paint
Coating thickness	120 µ
Handrail type	Tilting, arched, wall
Handrail length	600 mm
Tube diameter	Ø 32mm
The wall thickness	1,5 mm
Maximum load	130 kg
Hole diameter	Ø 9 mm
Number of fixing holes	6
Includes	6x60 mm screws, 10x60 mm plugs

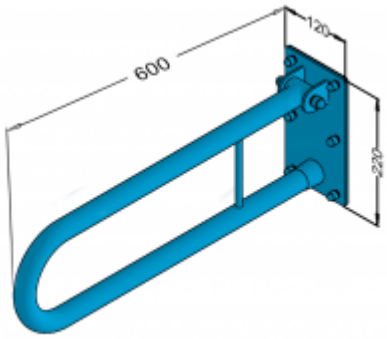

Handrail for disabled people, arched, tilting, wall-mounted, length 600 mm, general-purpose, made of 32 mm diameter carbon steel tube, black powder coated. We use this type of handrail in the washbasin, shower, and toilet areas.

Makoinstal S.C.
ul. Ostrobramska 67, 04-175 Warszawat
+48 22 499 59 50, +48 22 499 59 51
makoinstal@makoinstal.pl