MAKOINSTAL
Infrastruktura sanitarna

Product code:
2584

Wall Mounted Electronic Photocell 2584

- Suitable for accessible walls
- Infrared sensor with activation on presence detection
- Vandal proof stop after 1 min of continuous flow
- Automatic anti-legionella water flow every 24h after last use
- Long-life 6V lithium battery (220,000 cycles), or concealed 230V AC / 6V DC power supply in separate junction box 130x110x50 mm
- Solenoid valve 6V (behind wall)
- Aerator with 6 l/min. flow limiter

Power	Long-life 6V lithium battery (220,000 cycles), or concealed 230V AC / 6V DC power supply in separate junction box 130x110x50 mm or Solenoid valve 6V (behind wall)
Connector	1/2"
Temperature	5-70°C
Design	Brass covered with chrome
Water time flow	6 l/min
Start	Infra-red sensor
Operating pressure	Min - 1 - max - 8 bar
Spout	With vandal-resistant aerator

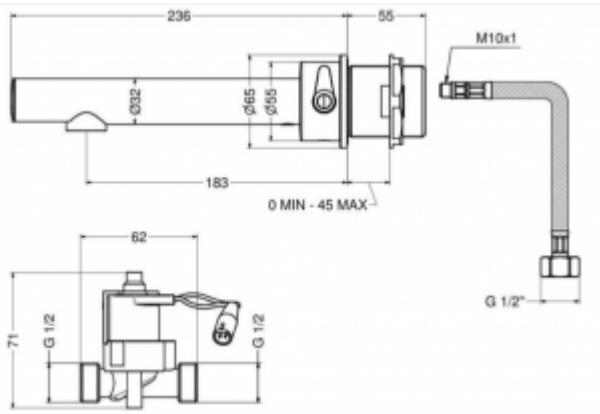

The non-contact battery 2584 is a product that guarantees convenient installation as well as safe and non-contact use. The 2584 faucet is an ideal solution for the most diverse rooms, as its installation is possible even in the case of thin walls, such as plasterboard. The offered non-contact fittings have a built-in infrared sensor, thanks to which you only need to bring your hands closer to start the water flow. A water-saving system is built into the wall-mounted tap, which automatically turns off the flow after 1 minute of continuous use.
For the 2584 series, there are two types of power supply:
- powered by a 230V AC / 6V DC power supply - ID 2584R;
- 6V lithium battery (CRP2) - ID 2584B.

The outer part of the faucet is made of brass covered with chrome. The advantage of brass fittings is durability and resistance to corrosion, temperature, and pressure changes

Makoinstal S.C.
ul. Ostrobramska 67, 04-175 Warszawat
+48 22 499 59 50, +48 22 499 59 51
makoinstal@makoinstal.pl