MAKOINSTAL
Infrastruktura sanitarna

Product code:
9019

shower spout 9019

- The body is made of chrome-plated brass
- High resistance to vandalism due to the highest quality materials
- Antiscaling
- Exceptional durability and reliability
- Italian product
- Simple operation
- Easy assembly
- 15 years manufacturer&HASH39;s warranty excluding consumable parts
- PZH certificate, CE declaration

* Possibility to buy the head without spout symbol 9019/1

Connector	1/2"
Design	Vandal-resistant design - chrome-plated brass, anti-deposits
Regulacja nachylenia	10 to 30 degrees
Reduktor przepływu	Up to 8 liters per minute
Ciśnienie operacyjne	from 0.5 to a maximum of 6 bar
Dopuszczalna temperatura wody	from 5 to 65 ° C
W zestawie	Spout, mounting kit

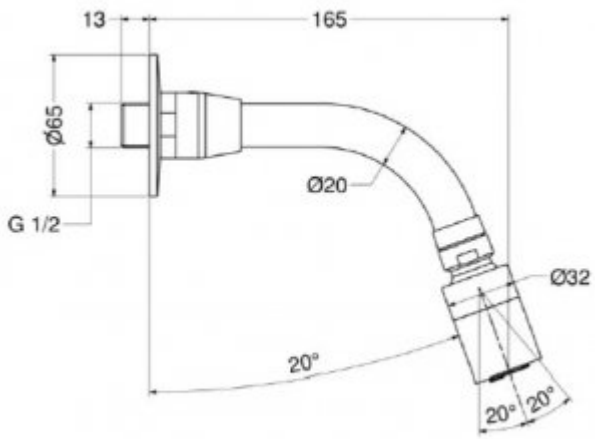

Shower spout with a movable head. Made of chrome-plated brass. Adapted for flush mounting. Thanks to the extension in the form of a tube, the spout is moved away from the wall, which allows the shower to be used at a greater distance from the wall. The angle of the water jet can be adjusted.

Makoinstal S.C.
ul. Ostrobramska 67, 04-175 Warszawat
+48 22 499 59 50, +48 22 499 59 51
makoinstal@makoinstal.pl